EFP-25AC 1″
Non-Metallic Diaphragm

The EFP-25AC 1″ non-metallic diaphragm pump is constructed in a **Polypropylene** wetted body centre section - with a three piece manifold design.

Capable of offering upto 177.9 LPM flow rate.

Polypropylene
EFP-25AC-PP-XX-XX-XX

PUMP SPECIFICATIONS

PORT SIZE
- 1″ ANSI/DIN Flange

MAX FREE FLOW ON WATER AT 20°C/68°F
- 177 lpm / 47 USGPM

(on some models 20% reduction should PTFE Diaphragms be fitted)

MAX WORKING PRESSURE @ 20°C/68°F
- 120psi (8.3 bsr)

PUMP BODY MIN/MAX WORKING TEMP
- Polypropylene - 2-79°C / 35-175°F

MAX PUMPABLE PARTICLE SIZE
- 3.2mm / 1/8″

AIR INLET PORT SIZE
- 1/4″ BSPT female

MAX SOUND POWER LEVEL (DBA - ISO 9614-2)
- 64.5 dBa

(at max air inlet pressure - will reduce with air pressure)

BODY MATERIALS AVAILABLE AND WEIGHT
- Polypropylene - 9.2 kg

DIAPHRAGM & CHECK VALVE MATERIALS AVAILABLE
- Stainless Steel
- PTFE
- Santoprene
- Nitrile

PERFORMANCE CURVE

Pump tested in water with inlet submerged

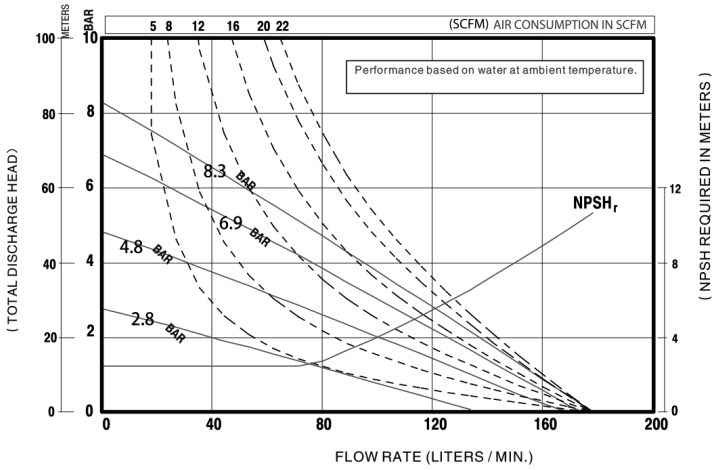

GA DRAWINGS

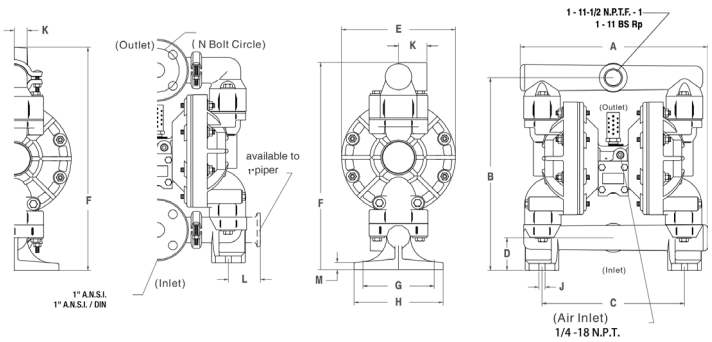

Port Size	Air Inlet Size	A	B	C	D	E	F	G	H	I	J	K	L	M
		mm	mm	mm	mm	mm	mm	mm	mm	mm	mm	mm	mm	mm
1″ ANSI/ DIN Flange	1/4″ BSP(F)	334	350	255	60	204	376	128	160	11	51	57	13	80